KOC ELECTRIC

www.kocelec.com

· **HEAD OFFICE**
1495-4 Songjung-dong, Gangseo-Gu, Busan, Korea (Zip : 618-270)
TEL. +82-51-832-0550 **FAX.** +82-51-832-0660 **E-MAIL.** koc@kocelec.com

· **ULSAN OFFICE**
852-162, Gacheon-ri, Samnam-myeon, Ulju-gun, Ulsan, Korea
TEL. +82-52-255-7700 **FAX.** +82-52-255-7799 **E-MAIL.** pkoc@kocelec.com

· **GERMANY OFFICE**
c/o Arknoah Ship Management GmbH
Domstr.17, D-20095 Hamburg
TEL. +49 40 8195 2898 **FAX.** +49 40 8195 2967 **E-MAIL.** shjeong@arknoah.com

OCT. 2013

Design by www.cs21.com

Since 1979

Introduction to KOC

KOC ELECTRIC

High Voltage Transformers

Customer and Quality are the KOC's first priority

KOC ELECTRIC CO., LTD.

KOC INDEX

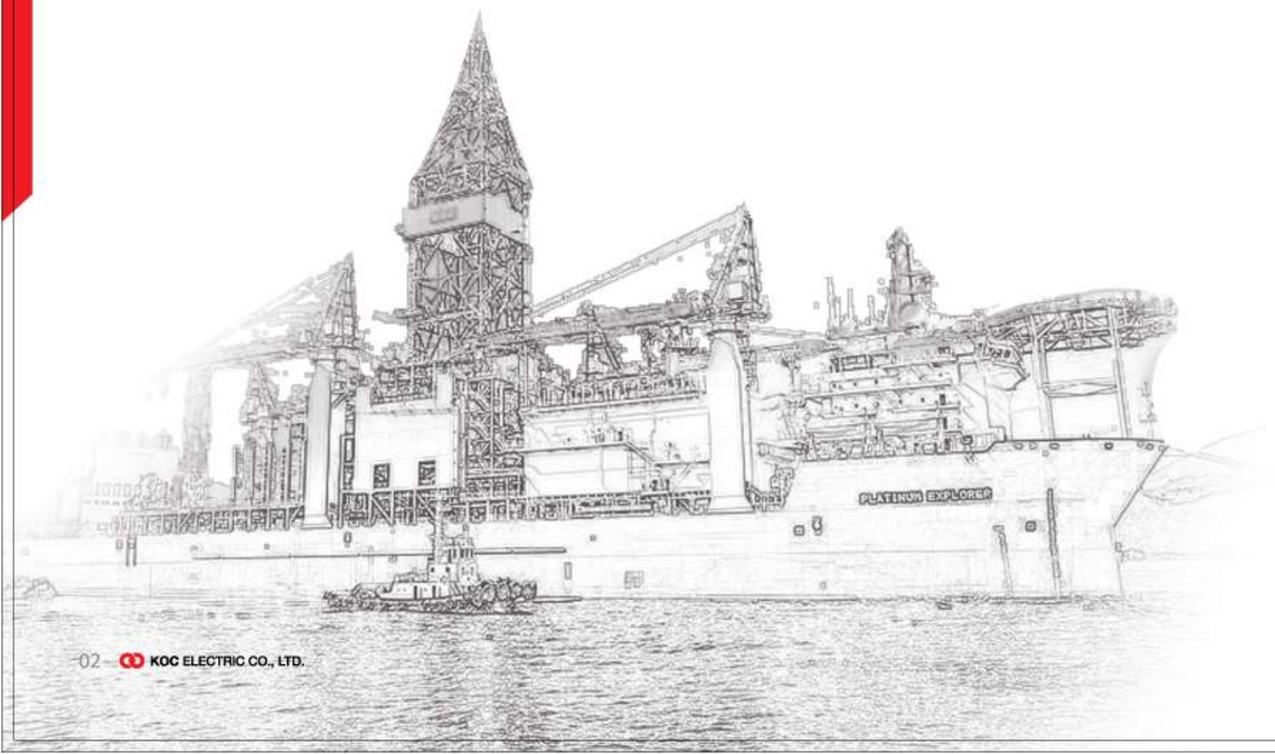

Company Information

- Established Company Since 1979
- Fully Paid Capital of 9600 Thousand Dollar (US$)
- 230 Employees (Head Office & Ulsan Factory)

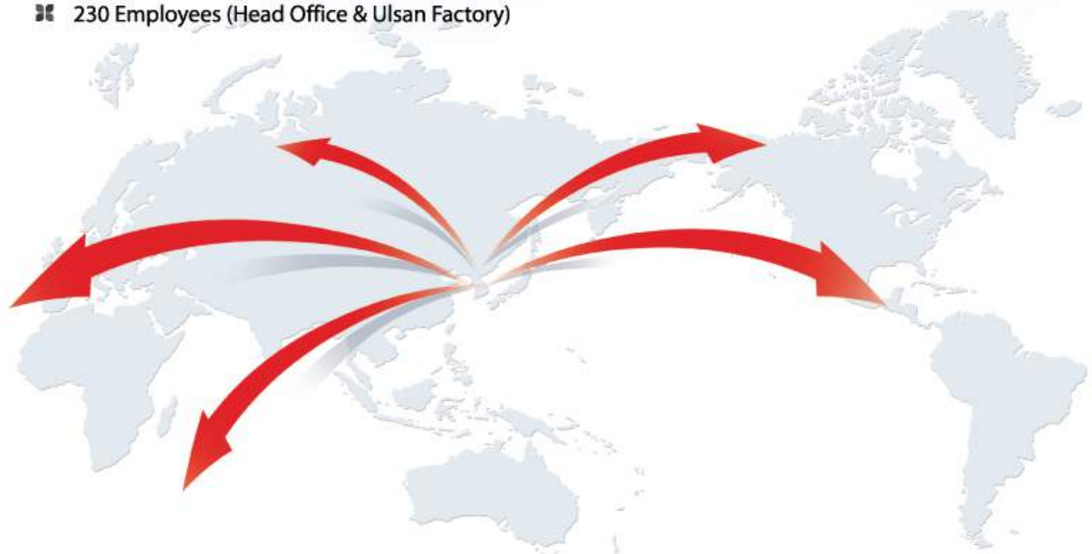

HEAD OFFICE

1495-4 Songjung-dong, Gangseo-Gu,
Busan, Korea (Zip : 618-270)
TEL. +82-51-832-0550 **FAX.** +82-51-832-0660
E-MAIL. koc@kocelec.com

ULSAN OFFICE

852-162, Gacheon-ri, Samnam-myeon
Ulju-gun, Ulsan, Korea
TEL. +82-52-255-7700 **FAX.** +82-52-255-7799
E-MAIL. pkoc@kocelec.com

KOC ELECTRIC CO., LTD.
www.kocelec.com
HEAD OFFICE : **TEL.** +82-51-832-0550 **E-MAIL.** koc@kocelec.com

Main Products

Transformers

- Cast resin Type Transformer
  (UP TO 36kV, 15MVA)
- Dry Type Transformer
  (UP TO 13.2kV, 10MVA)
- VPI Type Transformer
  (UP TO 24kV, 10MVA)
- ATEX Explosion Proof Transformer
  (UP To 13.2kV, 10MVA)
- Water-Cooled Type Transformer
  (UP TO 36kV, 20MVA)

Cast Resin TR

ATEX Explosion Proof TR

Water-Cooled Type TR

Cast Resin TR with Cubicle

VPI Disk TR

H/V Cast Resin Transformers

Product Ranges

- Capacity Ranges : Up to 15MVA
- Rated Voltages : Up to 36kV
- Ph. Freq. : 3PH, 50/60Hz
- Enclosure Protection : IP00 Up to IP44
- Cooling : AN, AF, WATER COOLING
- Insulation Class : B, F, H
- Winding Materials : AL. OPTION CU.
- Standards
  IEC 60076, ANSI C57, NEMA ST-20 and
  All Ship's Classification

Advantages

They are also available according to ship's classification of vacuum casting for all windings and by the reinforcement of glass fiber.
Cast Resin Transformers are produced according to the customer specifications and IEC STANDARDS as well as IEC 60076 and IEC 60726.
They are also available according to ship's classification societies.

3D Figure of KOC Electric Power Schema

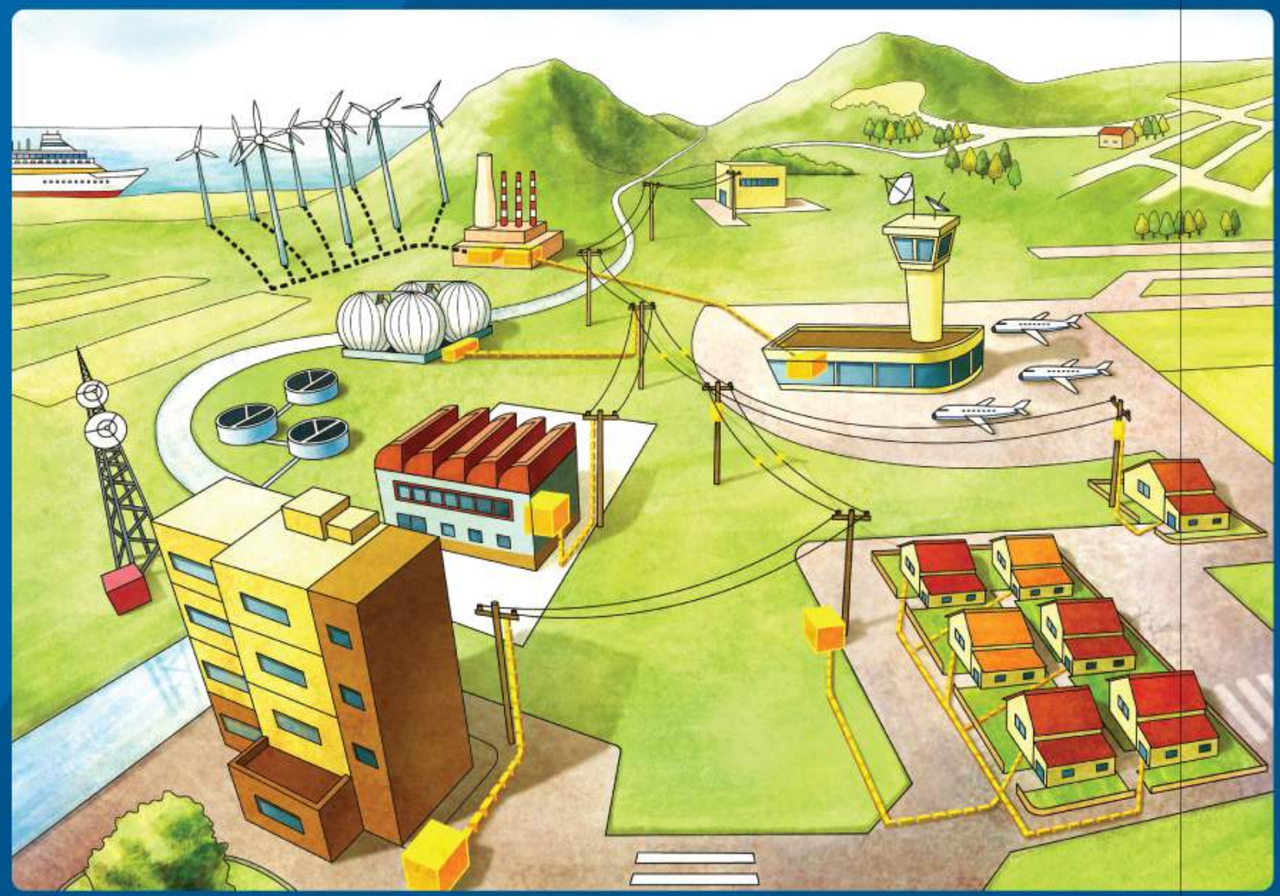

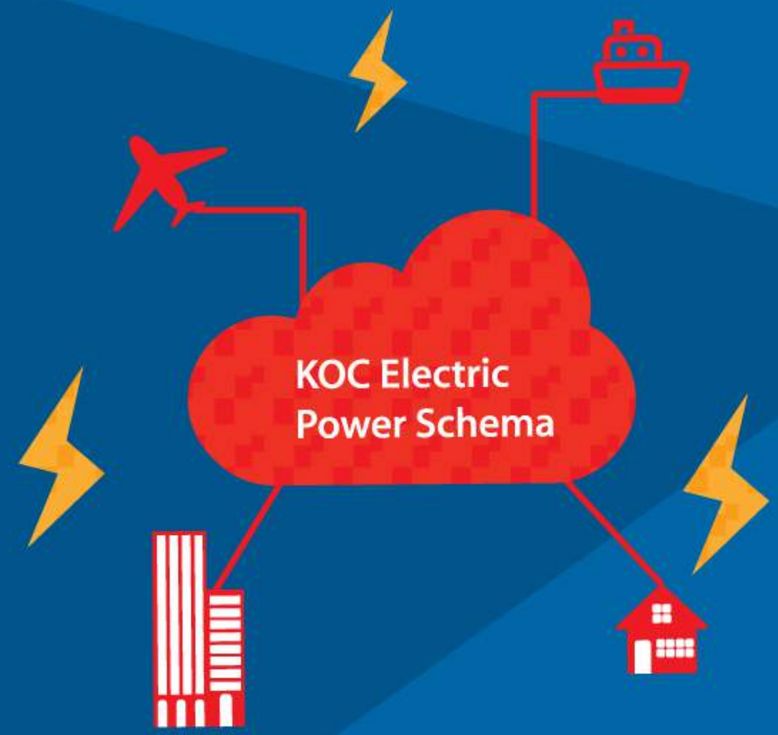

Application & Experiences

Over 50 Countries
Over 60 Ship's Owners

Offshore & FPSO

Our Customers Is World Wide

KOC's Transformers

Many experiences, continuous research and development technology, and unique WATER COOLED, CAST RESIN, DRY TYPE And ATEX H/V TRANSFORMERS.
The KOC has manufactured and supplied numerous WATER COOLED, CAST RESIN, DRY TYPE And ATEX H/V TRANSFORMERS.
It also has been supplied for marine, offshore & industry use.
To be recognized for its quality.

Applications

- Marine & Offshore
- Power Plants and Oil Platforms
- Underground Rail Road
- High-Rise Building
- Traction
- Nuclear Power Plant, Hydroelectric Power Plant

Design Features Of Cast Resin Transformer

Core

Core made of grain-oriented, low-loss electro-laminations. With V-notch and step-lap constructions to improve the characteristics of the core, and to reduce the noise of Transformers.

L/V winding

L/V winding made of aluminum or copper sheet. Turns firmly glued together by means of insulating sheet wrapper material.

H/V winding

H/V winding consisting of vacuum-potted single foil-type aluminum or copper strip.

L/V terminal

L/V terminal normal arrangement: Top, rear. Special version: Bottom, available on request.

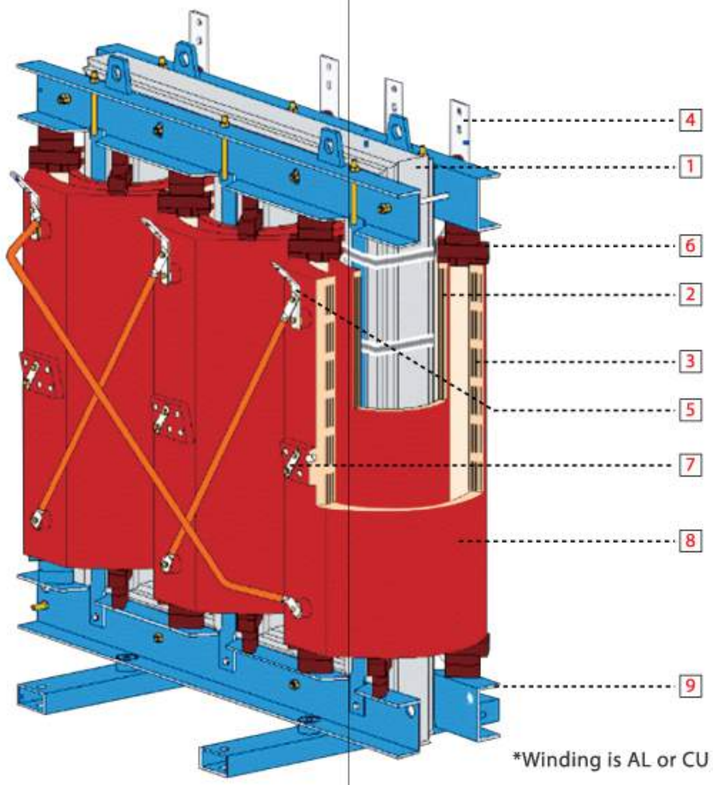

*Winding is AL or CU

H/V terminal

H/V terminal variable arrangements, for optimal station design.

Resilient spacers

Resilient spacers to insulate core and windings from mechanical vibrations, resulting in low noise emissions.

H/V tap

H/V tap changer, variable adaptation of electric volts to supply networks.

Insulation

Insulation: Mixture of epoxy resin and quartz powder. Makes the transformers maintenance-free, moisture-proof, tropicalized, flame-resistant and self-extinguishing.

Clamping frame

Clamping frame can be easily constructed by anchor bolts.

Warranty & Global Network

Certified KOC products to be free from defects in material and workmanship under normal use and service for a period of 12months from the date of delivery from KOC, what happens first.

In the event of a failure covered by warranty, KOC will undertake to repair or replace the equipment that it is defective and it is returned with all transportation charges prepaid to the KOC. Repairs or replacement under warranty will be made without charge.

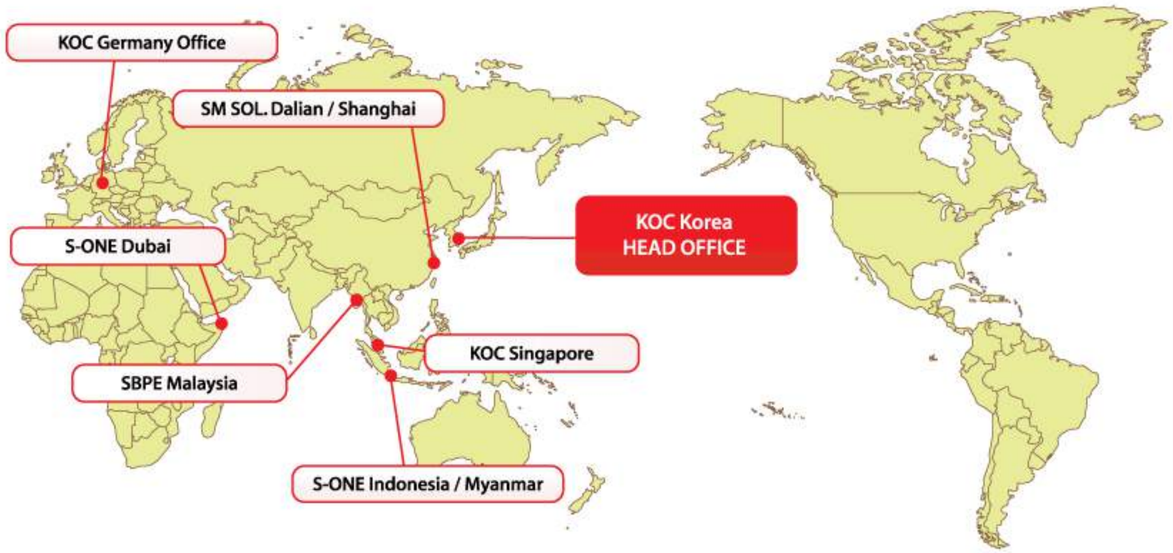

Supply Record / Totally

L/V & 6.6kV M/V Transformer / Totally

YEAR	CAPACITY	Q'ty	SHIP TYPE
~ 2005	BELOW 120kVA	5699	· LNG CARRIER · CONTAINER VSL. · CAR CARRIER · VLCC · CHEMICAL TANK · OIL TANK / BULK · WIND TURBINE (FORCE) · OFFSHORE · F.P.S.O · DRILL RIG · DRILL SHIP
	~ 500kVA	936	
	~ 2000kVA	202	
	~ 5000kVA	357	
2006 ~ 2008	BELOW 120kVA	10846	
	~ 500kVA	2077	
	~ 2000kVA	2168	
	~ 5000kVA	567	
2009 ~ 2012	BELOW 120kVA	10889	
	~ 500kVA	3198	
	~ 2000kVA	4031	
	~ 6000kVA	460	
TOTAL (L/V & 6.6kV M/V TR)		41,430 Sets	

Quality Assurance & Testing

All transformers are manufactured according to the IEC publication 60076 standard.
The transformers are individually tested according to IEC standards and several national standards e.g. NEMA, ANSI, JEC-214 & etc. and ship's classification.

Routine Tests

- Measurement of winding resistance
- Measurement of voltage ratio and testing of voltage vector relationship
- Measurement of impedance voltage, short-circuit impedance and load loss
- Measurement of on-load loss and current
- PD test
- Dielectric tests : Separate source voltage withstand test
  Induced over voltage withstand test

Type Tests

- Temperature rise test
- Lighting impulse test

Special Tests

- Short circuit test
- Measurement of sound level

Ship's Classification

ABS Group · Bureau Veritas · DNV · Germanischer Lloyd · Lloyd's Register · KR Korean Register · ClassNK