DONGWOO OPTRON

Flue Gas Analyzer

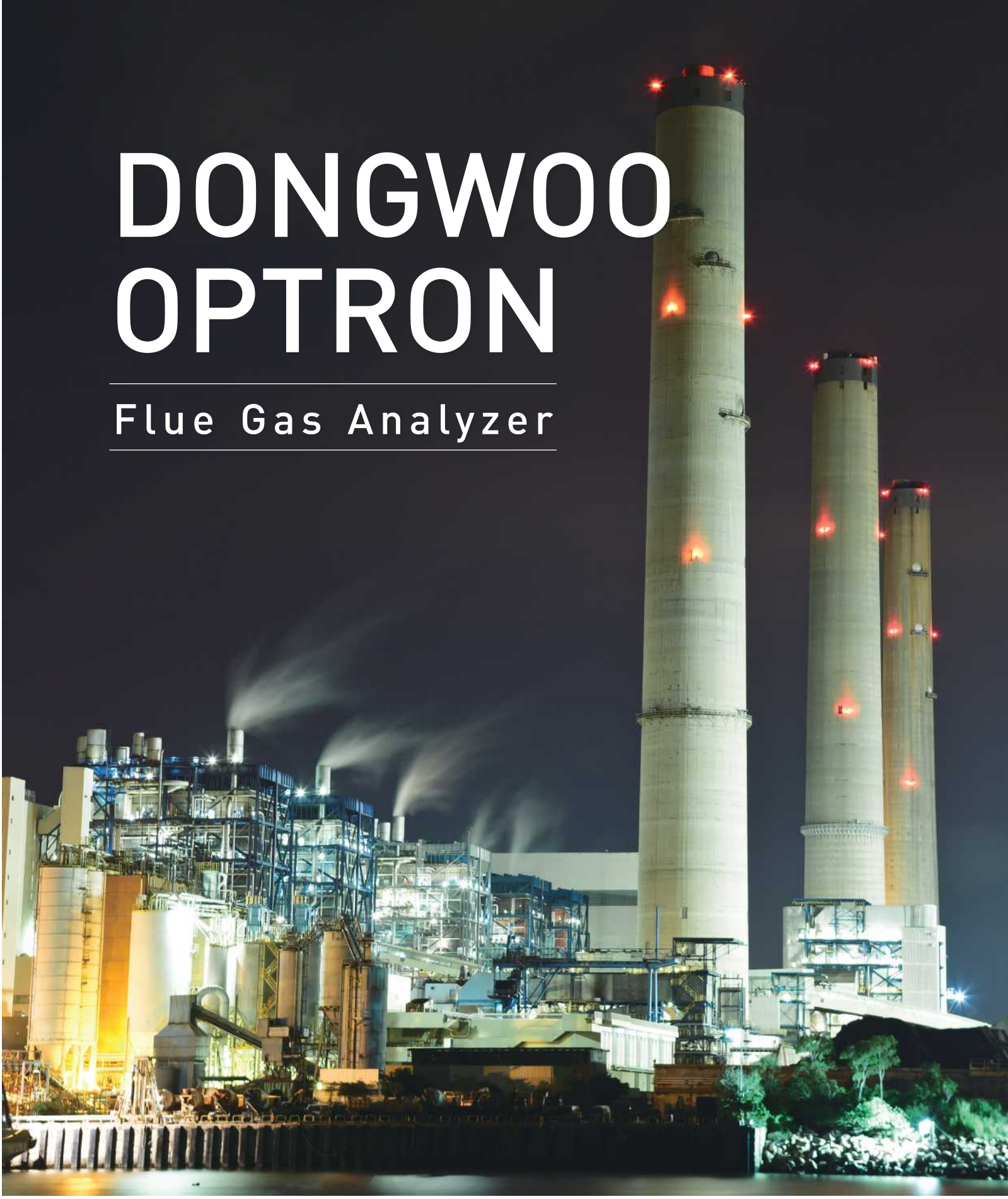

Continuous Emission Monitoring Systems

DONGWOO OPTRON Co., Ltd.

DONGWOO OPTRON

With Precision, For Environment

Established in 1989, Dongwoo Optron has succeeded in developing the first flue gas analyzer in Korea based on many years of experience in spectroscopy.
With continuous effort and investment to improve the quality and performance, Dongwoo Optron has achieved total sales of more than 700 units of flue gas analyzers and established itself as one of the leading flue gas analyzer manufacturers.
In pursuit of 'Accurate Analyzer with User-friendly System', Dongwoo Optron will continue strive to achieve customer satisfaction and trust in global market.

History

1989	Foundation of Dongwoo Optron
1998	Establishment of manufacturing facilities & R&D center
2001	New manufacturing facility and office building expansion
2006	1st Presidential Commendation for Excellence in Precision Technology
2007	Development of Flue Gas Analyzer
2009	2nd Presidential Commendation for Excellence in Precision Technology
2009	First sales of flue gas analyzers to 5 major state-owned power plants in Korea
2010	ISO 9001 certification
2011	Performance Certification issued by Korean government authority
2012	Pirme Minister Commendation for contributing to National Industrial Development
2012	ISO 14001 Certification
2014	CE, CB Certification
2015	CPA Certification (China)
2016	Minister of Environment Commendation for contributing to Natonal Environmental Industrial Development
2018	TUV Certification (Germany) / CCEP Certification (China)

APPLICATIONS

Power Plant

SO2, NOx, NH3, CO, O2, Opacity, Dust, Flowmeter, Temperature

Incineration

HCl, NOx, CO, SO2, HF, O2, H2O, Opacity, Dust, Flowmeter, Temperature

Petrochemical, Oil and Gas

VOCS, NOx, CO, SO_2, O_2, H_2O, Flowmeter

Glass, Ceramics

CO, SO_2, NOx, O_2, H_2O, Flowmeter, Temperature

Cement

SO_2, NOx, CO, HCl, HF, O_2, Dust, Flowmeter, Temperature

Paper, Pulp

SO_2, H_2S, Flowmeter, Temperature

Metal, Steel

CO, CO_2, SO_2, NOx, HCl, O_2, Flowmeter, Temperature

Maritime

NOx, SO_2, CO_2, O_2, Flowmeter, Temperature

POWER PLANT

Measured Components • SO_2, NOx, NH_3, CO, O_2, Opacity, Dust, Flowmeter, Temperature

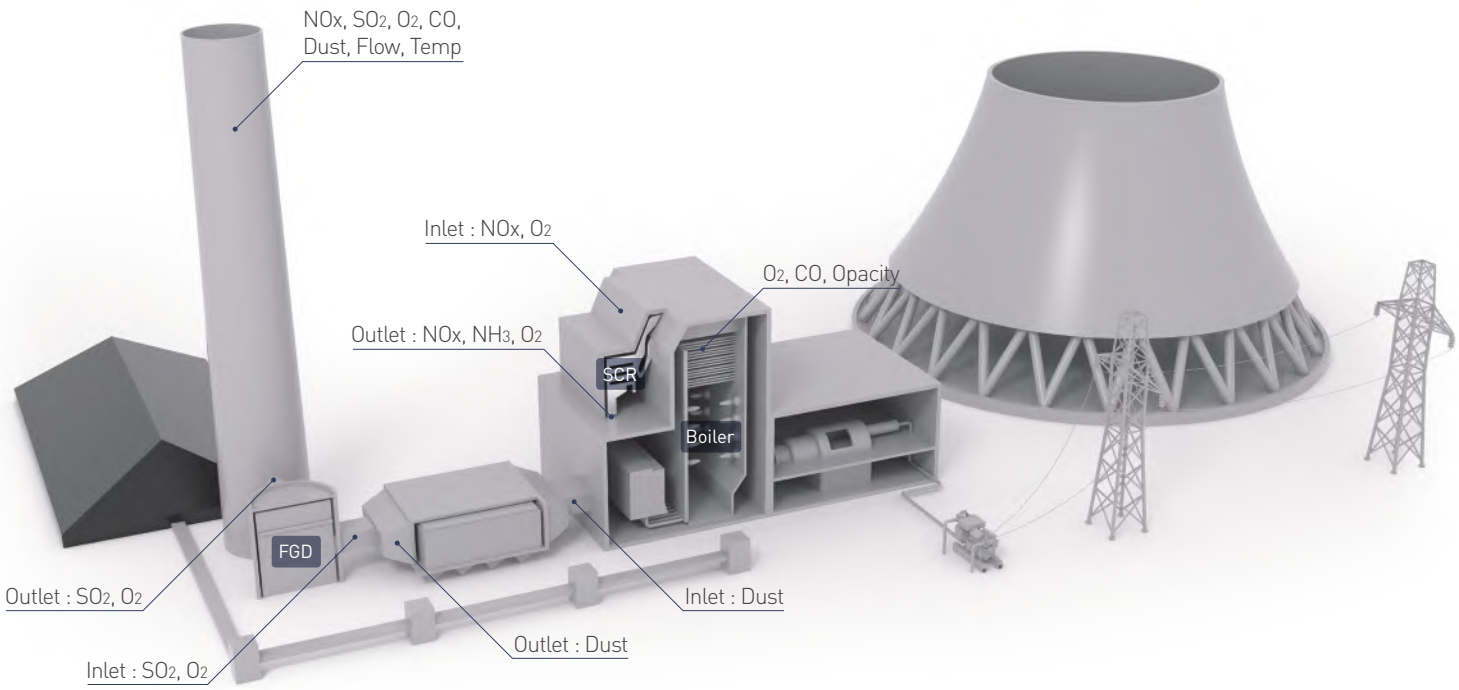

DONGWOO OPTRON

WASTE INCINERATION

Measured components • HCl, NOx, CO, SO_2, HF, O_2, H_2O, Opacity, Dust, Flowmeter, Temperature

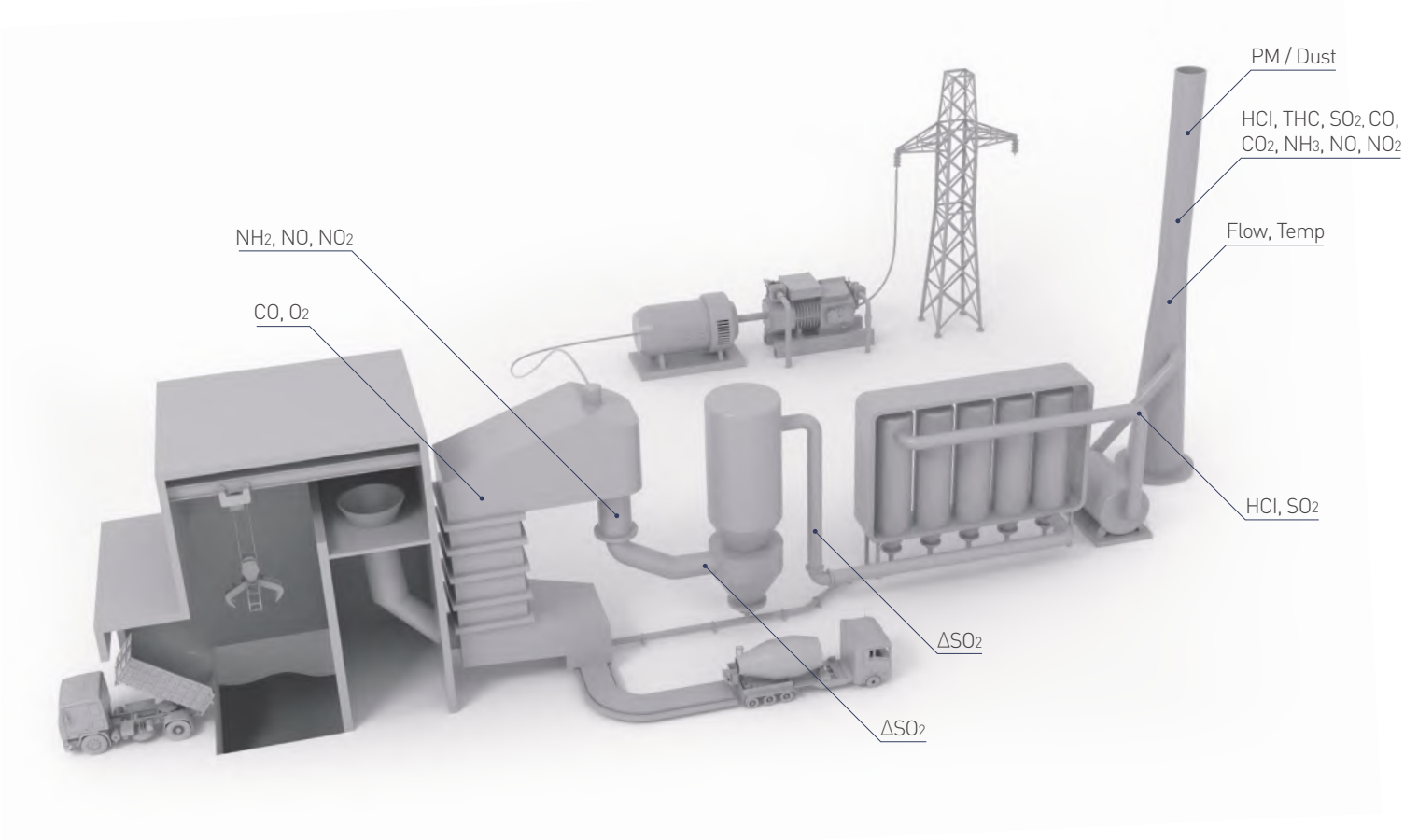

IN-SITU MONITORING TYPE

In-situ type analyzers measure the flowing gas insidue the stack/duct directly without sampling process. This system features prompt response time and easy installation and operation.

Advantages of DONGWOO OPTRON's In-Situ Analyzers

- Customization of Measuring Probe (total length and measuring section length) according to the installation site conditions
- Extended life time of measuring probe by applying patented probe protection method
- Control unit and Measuring unit are intergrated- convenient maintenance with no additional necessary special tools and easy control through touch panel

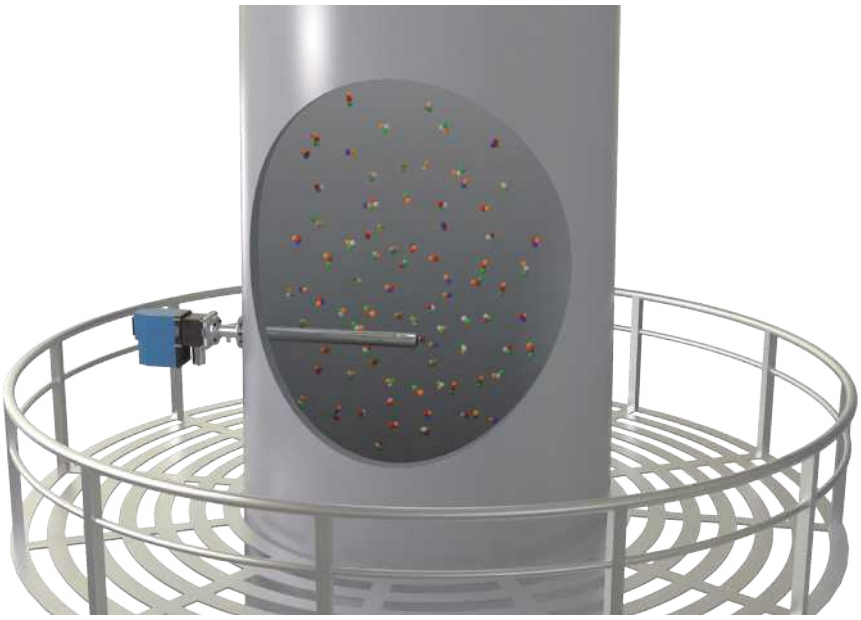

DONGWOO OPTRON

EXTRACTIVE MONITORING TYPE

Extractive type analyzers extract sample gas from stack/duct through sampling probe and deliver it to the conditioning system using heated sampling line. Conditioning system removes moisture and particles from the sampled gas and send to the analyzer.
This system is appropriate for extreme operating conditions since the system does not get affected by the installation site's ambient temperature and vibration. It also allows better accessibility as it can be monitored and controlled in sheltered location away from the extraction point.

Advantages of DONGWOO OPTRON's Extractive Analyzers

- Minimized number of filters in conditioning system for elevated stability of sample gas extracted
- Single-component analyzers are available, which can be cost-saving when only one or two components to be monitored

ANALYZER BY COMPONENTS

NO	Type	Model	NOx	SO_2	O_2	CO	CO_2	NH_3	HCl	CH_4	Dust/ Opacity	Flow
1	In-situ Type	DGA-X	●	●				●				
2		RGA-60				●	●					
3		TGA-50						●				
4		GGA-70-1			●							
5		LCD-80									●	
6		PGA-91										●
8	Extractive Type	RST-X	●	●	●	●	●		●	●		
9		DST-X	●	●	●			●				
10		RSM-60				●	●					
11		LSM-30							●			
12		LGH-80									●	

DGA-X
In-Situ

UV Absorption
NOx, SO_2, NH_3

DONGWOO OPTRON

Power plant / Petrochemical · Oil and Gas
Glass · Ceramics / Maritime / Boiler

Multi gas analyzer by UV DOAS (UV absorption) measuring principle, which features almost no interference by moisture and particles. Best suited for process monitoring such as SCR/FGD, and also applicable for CEMS.

Technical Specifications

Measured Components	SO_2, NO, NO_2, NH_3
Measurement Principles	Differential Optical Absorption Spectroscopy (DOAS)
Measuring Ranges	SO_2: 0~50 / 0~100 / 0~200 / 0~500 / 0~1,000 / 0~2,000 ppm NOx: 0~40 / 0~100 / 0~150 / 0~200 / 0~500 / 0~1,000 / 0~2,000 ppm NH_3: 0~10 / 0~20 / 0~50 ppm
Min. Measuring Unit	0.1ppm
Accuracy	NH_3: < ±1.0 ppm NO: < ±0.5 ppm NO_2: < ±2.5 ppm SO_2: < ±0.5 ppm
Zero Drift (24 hours)	< ±1% FS
Span Drift (24 hours)	< ±1% FS
Repeatability	< ±1% FS
Linearity	< ±1% FS
Response Time	< 5 seconds

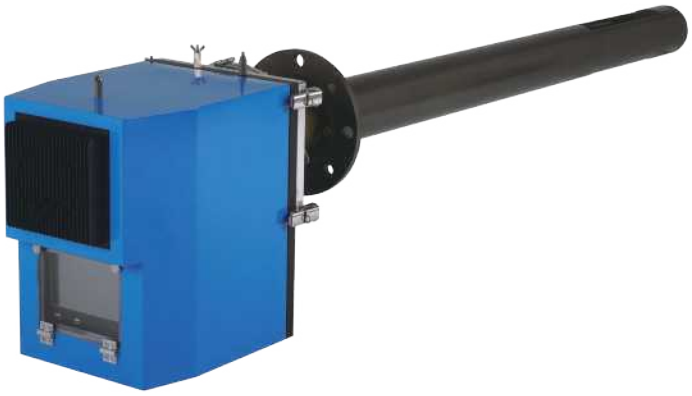

System Components
DGA-X Main Unit / Probe / Power Distribution Panel / Air Purge Unit / Master Flange / Cables

Options
Probe Protector / Teflon Coated Probe
ACU (Auto Calibration Unit)
Higher Enclosure or Protection Level
Regulator & Valve / Calibration Gas

Certificates / Approvals
Type Approval (Korea)
Performance Approval (Korea)
CPA, CCEP (China)
TUV (Germany)

Features
- Simultaneous measurements for two components among NOx, SO_2, and NH_3
- Less interenference from moisture and particles as it uses UV light source
- NOx converter is not required as it measures NO and NO_2 separately
- Enclosure level up to IP66 and NEMA4X
- Real Gas Calibration using patented Auto Calibration Unit (ACU)
- EX version is available as an option

Other Specifications

Measurement Conditions

Operating Temperature	-20 ~ +60 ℃
Gas Temperature	< +900 °C
Gas Pressure	±60 hPa (±611 mmH2O)

Communication

Analog Outputs	2 Channel, 4 ~ 20 mA
Digital Outputs	4 Channel
Digital Inputs	2 Channel
Display &Input Device	7" LCD Monitor (Touch screen)
Interface	RS232,422,485 / LAN / Hart

Dimension & Power Supply

Dimensions	W300 x D420 x H413 mm
Weight	22 kg
Enclosure Rating	P65 (IP66, NEMA4X)
Voltage	100 ~240 VAC, 50/60 Hz
Power Consumption	500 W

Probe

Materials	SUS 316L or SUS 316Ti
Length	1.0 M, 1.5 M, 2.0 M (Adjustable)
Measurement Section Length	300 mm, 500 mm other length available (Optional)
Gas Flow Rate	> 1 m /s
Weight	1.5 M : 20 kg 2.0 M : 25 kg Probe adapter : 5 kg
Air Purge	Necessary
Temperature Sensor	PT 1000

RGA-60
In-Situ

NDIR
CO, CO_2

Power plant / Boiler

Accurate in-situ type CO& CO_2 analyzer using Non-dispersive Infrared infrared Principle (NDIR). Improved accuracy by complementing CO absorption wavelength of the infrared and the signals of the surrounding section. Designed for operations in extreme conditions and best suited for efficiency control at boiler.

Technical Specifications

Measured Components	CO, CO_2
Measurement Principles	NDIR (Non-dispersive Infrared Absorption)
Measuring Ranges	CO: Min 0~500 / Max 0~10,000 ppm CO_2: Min 0~15 / Max 0~100%
Accuracy	< ±2% FS
Zero Drift (24 hours)	< ±2% FS
Span Drift (24 hours)	< ±2% FS
Repeatability	< ±2% FS
Linearity	< ±5% FS
Response Time	< 5 seconds

System Components

RGA-60 Main Unit / Probe / Power Distribution Panel
Air Purge Unit / Master Flange / Cables

Options

Probe Protector / Teflon Coated Probe
Higher Enclosure or Protection Level
Regulator & Valve / Calibration Gas

Features

- Applied Detector with high sensitivity
- Simple optical path increases efficiency of optical transmission from light source to detector

Other Specifications

Measurement Conditions

Operating Temperature	-20 ~ +60 ℃
Gas Temperature	< +900 °C
Gas Pressure	±60 hPa (±611 mmH20)

Communication

Analog Outputs	2 Channel, 4 ~ 20 mA
Digital Outputs	4 Channel
Digital Inputs	2 Channel
Display &Input Device	7" LCD Monitor (Touch screen)
Interface	RS232,422,485 / LAN / Hart

Dimension & Power Supply

Dimensions	W300 x D420 x H413 mm
Weight	22 kg
Enclosure Rating	IP65 (IP66, NEMA4X)
Voltage	100 ~240 VAC, 50/60 Hz
Power Consumption	500 W

Probe

Materials	SUS 316L or SUS 316Ti
Length	1.0 M ~ 2.5 M (Adjustable)
Measurement section Length	300 mm, 500 mm other length available (Optional)
Gas Flow Rate	> 1 m/s
Weight	1.5 M : 20 kg
Air Purge	Necessary
Temperature Sensor	PT 1000

TGA-50
In-Situ

TDLS
NH_3

DONGWOO OPTRON

Power plant / Petrochemical · Oil and Gas

Zero interference from other components by scanning wavelengths in a very narrow range using a Tunable Diode Laser (TDL). Optimized solution for NH_3 monitoring at coal plant's outlet of denitration facility with high SO_2 concentration.

Technical Specifications

Measured Components	NH_3
Measurement Principles	TDLS (Tunable Diode Laser Spectroscopy)
Measuring Ranges	Min 0~10 / Max 0~50 ppm
Min. Measuring Unit	0.1 ppm
Accuracy	< ±1.0 ppm
Zero Drift (24 hours)	< ±1% FS
Span Drift (24 hours)	< ±1% FS
Repeatability	< ±2% FS
Linearity	< ±1% FS
Response Time	< 5 seconds

System Components

TGA-50 Main Unit / Probe / Power DistributionPanel
Air Purge Unit / Master Flange / Cables

Options

Probe Protector / Teflon Coated Probe
Higher Enclosure or Protection
Regulator & Valve / Calibration Gas

Features

- Zero interference by other gas components by using TDL measuring principle
- Less interference from moisture and dust
- Rapid response time and high sensitivity by using laser scanning of extremely narrow range
- Optimized for measuring NH_3 at the end of a denitration facility with high SO_2 concentration

Other Specifications

Measurement Conditions

Operating Temperature	-20 ~ +60℃
Gas Temperature	< +550 ℃
Gas Pressure	±60 hPa (±611 mmH_2O)

Communication

Analog Outputs	2 Channel, 4 ~ 20 mA
Digital Outputs	4 Channel
Digital Inputs	2 Channel
Display &Input Device	7" LCD Monitor (Touch screen)
Interface	RS232,422,485 / LAN / Hart

Dimension & Power Supply

Dimensions	W300 x D420 x H413 mm
Weight	22 kg
Enclosure Rating	IP65 (IP66, NEMA4X)
Voltage	100 ~240 VAC, 50/60 Hz
Power Consumption	500 W

Probe

Materials	SUS 316L or SUS 316Ti
Length	1.0 M ~ 2.0 M (Adjustable)
Measurement Section Length	500 mm
Gas Flow Rate	> 1 m/s
Weight	1.5 m : 20 kg 2.0 m : 25 kg Probe adapter : 5 kg
Air Purge	Necessary
Temperature Sensor	PT 1000

GGA-70-1
In-Situ

Zirconia
O_2

Power plant / Waste incineration / Paper · Pulp
Metal · Steel / Glass · Ceramics / Maritime / Boiler

By applying Zirconia (ZrO_2) sensor, changes in Electromotive Force (EMF) due to the ionization reaction among platinum (Pt) electrodes to be converted to the partial pressure (concentration) of oxygen molecules in the flue gas. Most widely accepted O_2 measuring method at any facility, from boiler to CEMS.

Technical Specifications

Measured Components	O_2
Measurement Principles	Zirconia (ZrO_2)
Measuring Ranges	0~25% vol. / 0~100% vol.
Min. Measuring Unit	0.01%
Accuracy	< ± 1% FS
Zero Drift (24 hours)	< ± 1% FS
Span Drift (24 hours)	< ± 1% FS
Repeatability	< ± 1% FS
Linearity	< ± 1% FS
Response Time	< 5 seconds

System Components
Detector / Analyzer Panel
Calibration Gas Unit / Master Flange / Cables

Options
Detector Protector / Teflon Coated Detector
Higher Enclosure or Protection Level
Regulator & Valve / Calibration Gas

Certificates / Approvals
Type Approval (Korea)
CCEP (China)

Features
- K-type TC with excellent linearity of temperature and electromotive force applied
- High efficiency with light weight and low thermal conductivity
- Periodic automatic diagnosis function to maintain accuracy
- Built-in IC with CJC (Cold Junction Compensation)
- Noise reduction and extended heater lifetime by applying Zero-Crossing function
- Enclosure level up to IP66 and NEMA4X

Other Specifications

Measurement Conditions

Operating Temperature	-20 ~ +60 ℃
Operating Humidity	0 ~ 95% RH
Gas Temperature	0 ~ +800 ℃
Gas Pressure	-5 ~ 250 kPa

Communication

Analog Outputs	4~20 mA DC, 2 Channel / 1~5V DC, 2 Channel
Digital Outputs	4 Channel
Digital Inputs	2 Channel
Display & Input Device	4.3" LCD touch panel
Interface	RS232,422,485 / LAN / Hart / USB
Storage Device	Flash Memory

Dimension & Power Supply

Dimensions	W370 x D200 x H480 mm
Weight	14 kg
Enclosure Rating	IP65
Voltage	100 ~ 240 VAC, 60 Hz
Power Consumption	Max. 300 W (Max. 400 W when using Gas Panel Heater)

Analyzer Sensor

Materials	SUS 316L or SUS 316Ti
Length	1.0 m, 1.5 m
Heating Temperature	+750 ℃
Weight	1.0 M : 10 kg 1.5 M : 15 kg
Temperature Sensor	PT 1000 (Optional)

Calibration Gas Unit (Frame Type)

Materials	SUS 304
Dimensions	W1650 x D340 x H340 mm
Operating Temperature	0 ~ +40 ℃
Weight	14 kg

Calibration Gas Unit (Panel Type)

Materials	SUS 304
Dimensions	W500 x D300 x H1,200 mm
Operating Temperature	-20 ~ +60 ℃
Weight	35 kg (46 kg including base)

LCD-80
In-Situ

Laser
Dust (Dry type)

DONGWOO OPTRON

Power plant / Waste incineration / Cement
Petrochemical · Oil and Gas / Metal · Steel
Paper · Pulp / Glass · Ceramics / Maritime / Boiler

Continuous dust monitoring system with Light Transmission method. Using a high-efficiency laser diode with 645nm~660nm red visible light wavelength as a light source, the amount of light reaching the measuring detector is measured and converted into dust concentration.

Technical Specifications

Measured Components	Dust
Measurement Principles	Laser (Optical transmission method)
Measuring Ranges	Min 0~15 / Max 0~10,000 mg/m^3
Min. Distances	1~10 m
Accuracy	< ±0.5% F.S
Zero Drift (24 hours)	< ±1% FS
Span Drift (24 hours)	< ±2% FS
Repeatability	< ±1% FS
Linearity	< ±2% FS
Response Time	< 5 seconds
Enclosure Rating	IP65

System Components
Transceiver Unit
Reflector Unit
Analyzer Unit / Cables
Master Flange / Air Purge Unit

Options
Calibration Zig
Main Unit Cabinet
Higher Enclosure or Protection Level

Certificates / Approvals
Type Approval (Korea)
CPA (China)

Features
- Simple optical alignment check with window viewer
- High accuracy at any concentrations- Double-Path analysis for low concentration sites and Single-Path analysis for high concentration sites
- Enclosure level up to IP66 and NEMA4X

Other Specifications

Measurement Conditions

Operating Temperature	-20 ~ +60 ℃ (-20 ~ +70 ℃)
Operating Pressure	3 bar (≒ 300 kPa)
Operating Humidity	0 ~ 95% RH
Gas Temperature	-30 ~ +600 ℃
Gas Pressure	-50 ~ 30 hPa

Communication

Analog Outputs	1 Channel, 4 ~ 20mA
Digital Outputs	3 Channel
Digital Inputs	1 Channel / DI Voltage 12 VDC~24 VDC
Display &Input Device	7" LCD touch panel (Touch screen / USB)
Interface	RS232,422,485 / TCP-IP Via Ethernet / Hart

Dimension & Power Supply [Analyzer Unit]

Materials	SUS 304
Voltage	100 ~ 240 VAC, 50/60 Hz
Power Consumption	200 W (Max.)
Dimensions	W400 x D201 x H500 mm
Weight	18.5 kg

Dimension & Power Supply [Transceiver Unit]

Materials	SUS 304, AL 6061
Voltage	12 V / 24 V
Dimensions	W279 x D150 x H200 mm
Weight	4.8 kg

Dimension & Power Supply [Reflector Unit]

Materials	SUS 304, AL 6061
Voltage	N/A(24V with heater option)
Dimensions	W279 x D150 x H200 mm
Weight	4.6 kg

LGH-80
Sampling

Laser (Mie Scattering)
Dust (Wet type)

Power plant / Waste incineration / Cement
Petrochemical · Oil and Gas / Metal · Steel / Paper · Pulp
Glass · Ceramics / Maritime / Boiler

Converting the intensity of the Mie Scattering Light to concentration of the dust collected from the stack/duct. Using the ejector principles, it eliminates the influence of moisutre which is included in the sample taken by heating up above 130° C. Increased accuracy by sampling at constant velocity inhalation.

Technical Specifications

Measured Components	Dust
Measurement Principles	Mie Scattering
Measuring Ranges	Min 0~15 / 0~200 mg/m^3
Min. Measuring Unit	0.1 mg/m3
Accuracy	< ± 2% FS
Zero Drift (24 hours)	< ± 2% FS
Span Drift (24 hours)	< ± 5% FS
Repeatability	< ± 2% FS
Linearity	< ± 10% FS
Response Time	1 second

System Components

Main Unit / Sample Probe / Heating Chamber/ Measuring Chamber and Flow Control Unit / Measuring Probe Unit / Air Purge Unit

Options

Teflon Coated Probe
(Standard: PVDF Sample Probe)
Mounting Rack
In-place Calibration Filter Unit

Features

- Low concentration measurement as low as 0.1mg/m^3 by using light scattering method
- Wet type measurement prevents moisture interference
- Periodic blow-back purging prevents dust accumulation in extractive system
- Periodic self-calibrating using equivalent light scattering filter inserted
- Increased accuracy by sampling at constant velocity inhalation

Other Specifications

Measurement Conditions

Operating Temperature	-20 ~ +50 ℃ (-30 ~ +60 ℃)
Gas Temperature	< +200 ℃ (Over +200 ℃ available on request)
Gas Flow Rate	4 ~ 20 m/s
Gas Pressure	< ±20 mbar
Gas Humidity	< 1 weight % (Over 1 weight % available on request)

Communication

Analog Outputs	1 Channel, 4~20 mA
Digital Outputs	4 Channel
Digital Inputs	1 Channel
Display & Input Device	7" LCD touch panel
Interface	RS232

Dimension & Power Supply

Dimensions	W1,000 x D500 x H1,800 mm
Weight	85 kg
Enclosure Rating	IP54 (Electrical device IP65)
Voltage	230 VAC, 50/60 Hz
Power Consumption	2.3 kW (Max.)

PGA-91
In-Situ

Pitot-tube
Flowmeter

DONGWOO OPTRON

Power plant / Waste incineration / Cement
Petrochemical · Oil and Gas / Metal · Steel
Paper · Pulp / Glass · Ceramics / Maritime / Boiler

Using the differential pressure (dynamic pressure) of S-Type Pitot-Tube to obtain the flow rate in the stack/duct. Partial modification of Pitot-Tube structure is available according to the operation.

Technical Specifications

Measured Components	Flow rate (Vs), Pressure dynamic (Pd), Pressure Static (Ps), Pressure ambient (Pa), Temperature (Ts)
Measurement Principles	Pitot-tube
Measuring Ranges	Vs 0~50 m/s, Pd 2.5~254 mmH2O, Pa 500~1,100 hPa
Accuracy	< ±0.5% FS
Repeatability	< ±0.5% FS
Linearity	< ±1% FS
Response time	< 5 seconds

System Components
Analyzer Panel / S-Type Pitot Tube
Master Flange / Cables

Options
Main Unit Cabinet
Teflon Coated Probe

Certificates / Approvals
Type Approval (Korea)
CPA (China)

Features
- Simple installation and maintenance by using Pitot-Tube method
- Remote Zero-calibration

Other Specification

Measurement Conditions

Operating Temperature	-18 ~ +60 ℃
Gas Temperature	< 500 °C

Communication

Analog Outputs	4 ~ 20 mA, 2 Channel and HART communications standard 1 Channel
Analog Inputs	4 ~ 20 mA, 1 Channel (Internal)
Digital Outputs	4 Channel
Digital Inputs	1 Channel
Display &Input Device	7" LCD Monitor (Touch Screen)
Interface	RS485 and RS232, RS422, Ethernet

Dimension & Power Supply

Dimensions	W350 x D480 x H243 mm
Weight	25 kg
Enclosure Rating	IP65 (Optional)
Voltage	220 VAC, 50/60 Hz
Power Consumption	60 W

Pitot Tube

Materials	SUS 316L or SUS 316-Ti
Length	500 mm ~ 2,500 mm (Adjustable)
Max. Gas Temperature	< 500 °C
Gas Flow Rate	> 0.01 m/s
Weight	1.5 M : 10 kg 2.0 M : 15 kg
Air Purge	Necessary
Temperature Sensor	K type thermocouple

RST-X
Sampling

NDIR / Zirconia
NOx, SO_2, O_2, CO, CO_2, HCl, CH_4

Power plant / Waste incineration / Cement
Petrochemical · Oil and Gas / Metal · Steel
Paper · Pulp / Glass · Ceramics / Maritime / Boiler

Extractive type analyzer with Nondispersive Infrared (NDIR) measuring principle. Consists of Hot-wet flow and high temperature gas cell to prevent the gas absorption by moisture without a separate cooler after sampling.

Technical Specifications

Measured Components	NOx, SO_2, O_2, CO, CO_2, HCl, CH_4
Measurement Principles	NDIR (NOx, SO_2, CO, CO_2, HCl, CH_4) / Zirconia (O_2)
Measuring Ranges	NO: 0~50 / 0~1,000 ppm SO_2: 0~100 / 0~1,000 ppm O_2: 0~25 / 0~100 % CO: 0~100 / 0~1,000 ppm CO_2: 0~25 / 0~50 % HCl: 0~10 / 0~1,000 ppm CH_4: 0~500 / 0 ~2,500 ppm
Repeatability	< ±2% FS
Linearity	< ±2% FS
Response time	< 5 seconds

System Components
RST-X Main Unit

Options
Sample Probe / Sample Line / Sample Pump
Conditioning System
(Filter, Valve, Drain Pump Etc.)
Heating Block / Distribution Panel
Rack Panel / Regulator / Calibration Gas

Features
- Integration of NDIR and Zirconia measuring principles into one analyzer unit.
- High accuracy for low concentration measurement with long light path
- Simultaneous measurement of NOx, SO_2, CO, O_2, HCl, and CH_4 provides optimized solution for the such as waste incinerators and paper mills
- Easy maintenance by minimizing the conditioning systems is measures the gas in heated status without moisutre removal

Other Specifications

Measurement Conditions

Operating Temperature	+5 ~ +40 ℃
Gas Temperature	< +900 °C (220 °C for measuring cell)
Gas Pressure	800 ~1,200 mbar

Communication

Analog Outputs	8 Channel, 4 ~ 20 mA
Digital Outputs	4 Channel
Relay Outputs	4 Channel
Digital Inputs	2 Channel
Display & Input Device	7" LCD Monitor (Touch screen / USB)
Interface	RS232,422,485 / TCP-IP Via Ethernet / Hart Communication

Dimension & Power Supply

Materials	SUS 304, Al 6061
Dimensions	W550 x D440 x H175 mm
Voltage	100 ~ 240 VAC, 50/60 Hz
Power Consumption	165 W

DST-X
Sampling

UV Absorption / Paramagnet or Zirconia
NO_x, SO_2, NH_3, O_2

DONGWOO OPTRON

Power plant / Waste incineration / Cement
Petrochemical · Oil and Gas / Metal · Steel
Paper · Pulp / Glass · Ceramics / Maritime / Boiler

Extractive type analyzer with UV absorption (NO_x, SO_2) and Paramagnetic (O_2) Principle. Additional conditioning process can be structured depending on the operating conditions. Optimized for CEMS application, as well as process monitoring at sites with low dust concentration.

Technical Specifications

Measured Components	NO_x, NO_2, NH_3, SO_2, O_2
Measurement Principles	UV (NO,NO_2, NH_3, SO_2, O_2) / Paramagnet or Zirconia (O_2)
Measuring Ranges	NO_x : Min 0~40 / Max 0~2,000 ppm NO_2 : 0~100 ppm SO_2 : Min 0~100 / Max 0~2,000 ppm O_2 : Min 0~25% / Max 0~100%
Min. Measuring Unit	0.1ppm
Accuracy	< ±1% FS
Zero Drift (24 hours)	< ±1% FS
Span Drift (24 hours)	< ±1% FS
Repeatability	< ±1% FS
Linearity	< ±2% FS
Response Time	< 5 seconds

System Components
DST-X Main Unit

Options
Sample Probe / Sample Line / Sample Pump
Conditioning Systems(Cooler, Filter, Valve, Drain Pump etc.)
Distribution Panel
Rack Panel / Regulator / Calibration Gas

Certificates / Approvals
Type Approval (Korea)
CPA (China)
CCEP (China)
TUV QAL1 (Germany)

Features
- Paramagnetic Cell (high-performance sensor type) applied which has semi-permanent lifetime
- Less interference from moisture and dust as it uses UV as light source
- Individual measurement for NO or NO_2 (No need for NO_x converter)

Other Specifications

Measurement Conditions

Operating Temperature	+10 ~ +50 ℃ (-10 ~ +60 ℃)
Operating Humidity	0 ~ 99% r.H.
Gas Temperature	< +220 °C
Gas Flow Rate	0.5 L/min ~ 1.5 L/min
Sampling Method	Gas Cooler
Sampling Pump	Diaphragm Pump
Sampling Tube	PTFE
Operating Pressure	800 ~ 1,100 mbar

Communication

Analog Outputs	6Channel, 4 ~ 20 mA
Digital Outputs	12 VDC, 4 Channel / Digital Loop: 4 Channel (Max. 1A)
Digital Inputs	3 Channel
Display &Input Device	7" LCD Monitor (Touch screen / USB)
Interface	RS232,422,485 / TCP-IP Via Ethernet / Hart Communication

Dimension & Power Supply

Materials	SUS 304, Al 6061
Dimensions	W440 x D550 x H240 mm
Weight	30 kg
Voltage	88 ~ 264 VAC, 47 ~ 63 Hz
Power Consumption	MAX 300 W

RSM-60
Sampling

NDIR
CO, CO_2

Power plant / Waste incineration / Cement / Petrochemical · Oil and Gas / Metal · Steel Paper · Pulp / Glass · Ceramics / Maritime / Boiler

Extractive type analyzer with Nondispersive Infrared (NDIR) principle. Fast and reliable monitoring with single gas measurement.

Technical Specifications

Measured Components	CO, CO_2
Measurement Principles	NDIR (Non-dispersive Infrared)
Measuring Ranges	CO: 0 ~ 100 / 0 ~ 250 / 0 ~ 1,000 ppm CO_2: 0 ~ 25 / 0 ~ 50 Vol.%
Accuracy	< ±2% FS
Zero Drift (24 hours)	< ±2% FS
Span Drift (24 hours)	< ±2% FS
Repeatability	< ±2% FS
Linearity	< ±2% FS
Response Time	< 5 seconds

System Components

RSM-60 Main Unit

Options

Sample Probe / Sample Line / Sample Pump
Conditioning Systems (Cooler, Filter, Valve, Drain Pump Etc.)
Distribution Panel / Rack Panel / Regulator / Calibration Gas

Features

- Efficient and cost-saving when only CO/CO_2 to be monitored

Other Specifications

Measurement Conditions

Operating Temperature	+5 ~ +45 ℃ (-25 ~ +70 ℃)
Operating Humidity	0 ~ 90% r.H.
Gas Temperature	< +900 °C(100°C for measuring cell)
Gas Flow Rate	0.2 L/min ~ 1.5 L/min
Sampling Method	Electronic Gas Conditioner
Sampling Pump	Diaphragm Pump
Sampling Tube	PTFE
Operating Pressure	800 ~ 1,100 mbar

Communication

Outputs	2Channel, 4 ~ 20 mA
Digital Inputs	Digital Input 1CH (Voltage 12 VDC ~ 24 VDC)
Display &Input Device	7" LCD Monitor (Touch screen / USB)
Interface	RS232,422,485 / TCP-IP Via Ethernet / Hart Communication

Dimension & Power Supply

Materials	SUS 304, Al 6061
Dimensions	W485 x D551 x H177.6 mm
Weight	10 kg
Voltage	100 ~ 240 VAC, 48 ~ 63 Hz
Power Consumption	MAX 165 W

LSM-30
Sampling

TDLS
HCl

DONGWOO OPTRON

Power plant / Waste incineration / Cement
Metal · Steel / Paper · Pulp / Glass · Ceramics

Extractive type analyzer with TDLS (Tunable Diode Laser) principle. TDL scans a very specific light absorption wavelength range, and thus can clearly exclude possible interference zone of other adjacent gas components.

Technical Specifications

Measured Components	HCl
Measurement Principles	TDLS (Tunable Diode Laser Spectroscopy)
Measuring Ranges	Min 0~20 / Max 0~100 ppm
Accuracy	< ±2% FS
Zero Drift (24 hours)	< ±2% FS
Span Drift (24 hours)	< ±2% FS
Repeatability	< ±2% FS
Linearity	< ±2% FS

System Components
LSM-30 Main Unit

Options
Sample Probe / Sample Line / Heating Block
Distribution Panel
Rack Panel / Regulator / Calibration Gas

Features
- Less interference from other other gascomponents as TDL scans very narrow range of light wavelength (0.035 um)
- Less interference from moisture and dustcompared to other measuring principles
- Analysis in low flow rate is possible by minimizing measuring cell capacity

Other Specifications

Measurement Conditions

Operating Temperature	-20 ℃ ~ +50 ℃ (-40 ℃ ~ +80 ℃)
Operating Humidity	0 ~ 99% r.H.
Gas Temperature	< +190 ℃
Cell Temperature	+190 ℃
Cell Heating time	45 min (When heating from +25℃)
Gas Humidity	MAX 20% abs. H_2O
Gas Flow Rate	1.0 L/min ~ 5.0 L/min
Sampling Pump	Heated Diaphragm pump
Sampling Tube	PTFE
Operating Pressure	800 ~ 1,100 mbar

Communication

Analog Outputs	2 Channel, 4 ~ 20mA
Digital Outputs	12 VDC, 4 Channel
Digital Inputs	Digital 4Ch / Current, DI Voltage 12 VDC ~ 48 VDC
Display &Input Device	7" LCD Monitor (Touch screen / USB)
Interface	RS232,422,485 / TCP-IP Via Ethernet / Hart Communication

Dimension & Power Supply

Materials	SUS 304, Al 6061
Dimensions	W440 x D550 x H240 mm
Weight	20 kg
Voltage	88 ~ 264 VAC, 48 ~ 63 Hz
Power Consumption	MAX 165 W

Track Record

SCR

Company	Project	Gas Analyzer	Q'ty	Date
KOEN (Korea)	Young-Heung #3,4	NOx	4	2012-Oct.
	Young-Heung #3	NOx	4	2015-May.
	Young-Heung #2	NOx	2	2015-Oct.
	Young-Heung #4	NOx	2	2016-Feb.
	Young-Heung #1	NOx	2	2016-Mar.
	Young-Heung #4	NOx	1	2017-Sep.
	Young-Heung #4	NOx	1	2017-Sep
	Young-Heung #4	NOx	1	2018-Aug.
	Sam-Chun-Po #3,4	NOx	4	2012-Nov.
	Sam-Chun-Po #3,4	NOx + NH_3	4	2013-Mar.
	Sam-Chun-Po #1,2	NOx + O_2	4	2016-Mar.
	Sam-Chun-Po #3	NOx + O_2	2	2017-Nov.
	Sam-Chun-Po #3,4	NOx + NH_3	4	2018-May.
	Sam-Chun-Po #4	NOx / O_2	2	2018-Jul.
KOSPO (Korea)	Ha-Dong #8	NOx	4	2013-May
	Ha-Dong #5	NOx	4	2013-Aug.
	Ha-Dong #1,4	NOx	4	2014-Mar.
	Ha-Dong #6	NOx	4	2014-Jul.
	Ha-Dong #1	NOx + NH_3	2	2014-Nov.
	Ha-Dong #7	NOx	4	2014-Nov.
	Ha-Dong #2~4	NOx + NH_3	6	2015-Apr.
	Ha-Dong #5~8	NH_3	8	2012-May.
	Ha-Dong # 8	NOx / SO_2	4	2017-Jun.
	South Jeju #1,2	NOx + NH_3	2	2018-Apr.
	South Jeju #1,2	NOx + NH_3, O_2	2	2019-Jan.
	Ahn-Dong Combined #1	NOx	2	2018-Dec.
	Ahn-Dong Combined #1	NOx + NH_3	1	2018-Dec.
EWP (Korea)	Dang-Jin #5	NOx	2	2012-May.
	Dang-Jin #2	NOx	2	2013-Sep.
	Dang-Jin #3,4	NOx	4	2014-Sep.
	Dang-Jin #3,4	O_2	4	2014-Sep.
	Dang-Jin #7	NOx + NH_3	1	2014-Oct.
	Dang-Jin #7,8	NOx + NH_3	3	2015-Jun.
	Dang-Jin #5,6	NOx	4	2015-Sep.
	Dang-Jin #1,3	NOx	10	2018-Jul.
	Dang-Jin #1,3	O2	4	2018-Jul.
	Dang-Jin #7,8	NOx + NH_3	8	2019-Jan.
	Ul San #4~6	NOx + NH_3	8	2016-Sep.
	Ulsan #6	NH_3	2	2017-Jul.
WP (Korea)	Tae-Ahn #1,3,5,6	NOx	16	2012-Jan
	Tae-Ahn #2,4	NOx	8	2013-Mar.
	Tae-Ahn #8	NOx	4	2013-May
	Tae-Ahn #6	NOx	2	2015-Mar.
	Tae-Ahn #7	NOx	4	2015-Nov.
	Tae-Ahn #3,4	NOx	2	2016-Mar.
	Tae-Ahn #5	NOx	2	2016-May.
	Tae-Ahn #7,8	NH_3	4	2016-Oct.
	Pyeong-Taek #2	NOx	4	2014-May.
	Pyeong-Taek #1	NOx	4	2013-May
KOMIPO (Korea)	Bo-Ryeong #7	NOx	4	2017-Apr.
	Bo-Ryeong #8	NOx	2	2017-Aug.
	Bo-Ryeong #7,8	NOx	2	2017-Nov.
	Bo-Ryeong #8	NOx	4	2018-Apr.
	Bo-Ryeong #8	NOx	1	2018-Aug.
KOMIPO (Korea) [STX HeavyIndustry]	Sam-ChukGreen #1,2	NOx	16	2013-Dec.
	Sam-ChukGreen #1,2	NOx + NH_3	8	2013-Dec.
	Sam-ChukGreen #1,2	O_2	16	2013-Dec.
GS Donghae Elec. [STX HeavyIndustry]	Buk-Pyeong #1,2	NOx	10	2015-Feb.
	Buk-Pyeong #1,2	NH_3	4	2015-Feb.
Hanhwa Total [Hanmo]	Hanhwa Total	NOx	2	2014-Jul.
		NH_3	1	2014-Jul.
		O_2	1	2014-Jul.

Company	Project	Gas Analyzer	Q'ty	Date
Dongsuh Foods Corp (Korea)	Dongsuh Chang-WonPlant	NOx, NH_3	1	2015-Dec.
	Dongsuh Bu-Pyeong Plant	NOx, NH_3	1	2016-Jan.
GS E & R (KeumKangCNT)	Po-Chun Heat & power	NOx, NH_3	2	2015-Dec.
LG ChemNaju Plant	LG ChemNaju Plant	NOx, NH_3	1	2016-May.
Dae-Gu Dyeing Industrial Complex [DongwooE&I]	Dae-Gu Dyeing Industrial Complex #1~3	NOx + SO_2 NOx + NH_3	6	2016-Sep.
Hu-Chems	Hu-Chems	NOx + NH_3	16	2016-Dec.
WP (Korea) [GE PSK]	Shin-Pyeong-Taek #1	NOx/O_2	8	2017-Oct.
		NOx + NH_3	2	
S-Oil [Welcron KangWon]	S-Oil Onsan Plant	NOx, NH_3	16	2017-Mar.
WP (Korea) (Halla)	Tae-Ahn IGCC	NOx, NH_3, O_2	5	2017-Dec.
Sejong City [FK Engineering]	Sejong City Crematory Facility #1	NOx + NH_3	1	2018-Oct.
		O_2	1	
Go-sung Green Power [Hanshin B-tec]	Aux-Boiler	NOx	3	2018-Jun.
		NH_3	3	
		O_2	2	
		CO	1	
Huvis [Seoul Sharp Heavy Industries]	Huvis #1 SCR	NOx	1	2018-Dec.
		NOx + NH_3	1	
		O_2	1	

FGD

Company	Project	Gas Analyzer	Q'ty	Date
KOSEP (Korea)	Young-Heung #4	SO_2	2	2016-Jan.
	Young-Heung #2	SO_2	2	2016-Nov.
	Young-Heung #3	SO_2	2	2017-Feb.
	Young-Heung #3	SO_2	1	2017-Sep.
	Young-Heung #4	SO_2	1	2017-Sep.
	Young-Heung #1	SO_2	2	2017-Mar.
	Young-Heung #3	SO_2	1	2017-Sep.
	Young-Heung #4	SO_2	1	2018-Apr.
	Sam-Chun-Po #3,4	SO_2	4	2012-Nov.
	Sam-Chun-Po #1,2	SO_2	2	2014-Sep.
	Sam-Chun-Po #2	SO_2	2	2016-Apr.
	Sam-Chun-Po #3,4	SO_2	4	2018-May.
KOSPO (Korea)	Ha-Dong #1,3	SO_2	2	2011-Nov.
	Ha-Dong #2,4,5,6	SO_2	4	2012-Jun.
	Ha-Dong #1~6	SO_2	6	2014-Dec.
	Ha-Dong #1~4	NOx, SO_2	8	2018-May.
	Ha-Dong #5~8	NOx, SO_2	8	2018-May.
	South Jeju #1,2	NOx, SO_2	4	2017-Apr.
EWP (Korea)	Dang-Jin #1	SO_2	1	2011-Mar.
	Ul San #6	SO_2	1	2011-Oct.
WP (Korea)	Tae-Ahn #6	SO_2	2	2015-Mar.
	Tae-Ahn #7	SO_2	2	2015-Sep.
	Tae-Ahn #5	SO_2	1	2016-Apr.
	Tae-Ahn #5,8	SO_2	3	2016-Oct.
KOMIPO (Korea) [STX Heavy Industry]	Dang-Jin #9,10	SO_2	12	2014-Mar.
	Dang-Jin #9,10	SO_2	4	2014-Mar.
KOWEPO (Korea) [Doosan Heavy Industry]	Shin-Bo-Ryeong #1,2	SO_2	12	2014-Nov.
	Shin-Bo-Ryeong #1,2	O_2	4	2014-Nov.
KOWEPO (Korea) [Doosan Heavy Industry]	Tae-Ahn #9,10	SO_2	12	2014-Nov.
GS Donghae Elec [Doosan Heavy Industry]	Buk-Pyeong #1,2	SO_2	10	2015-Feb.

CEMS

Company	Project	Gas Analyzer	Q'ty	Date
KOEN (Korea)	Sam-Chun-Po #5	NOx, SO_2	1	2012-Nov.
KOSPO (Korea)	Ha-Dong #1~8	NOx, SO_2	8	2012-Jun.
	Ha-Dong #1~8	NOx, SO_2	8	2017-Mar.
EWP (Korea)	Dang-Jin #1~8	NOx, SO_2	8	2011-Oct.
	Ul San #4~6	NOx, SO_2, CO, CO_2, O_2	3	2015-Sep.
	Ul San #4~6	Dust, Flow	3	2015-Sep.
	Honam #1,2	O_2, Dust	1	2015-Sep.
	Honam #1,2	Temp, Flow	2	2015-Sep.
KOMIPO (Korea)	Jeju #2	NOx, SO_2	1	2012-Apr.
	Bo-Ryeong #1,2	NOx, SO_2	2	2012-Apr.
	Bo-Ryeong #1,2	NOx, SO_2, O_2	2	2016-Jun.
	Jeju #1,2	NOx, SO_2, O_2, Dust, Flow, Temp, D/L, FEP	2	2017-Mar.
	Jeju #3 GT	NOx, SO_2, O_2, Flow, Temp, D/L, FEP	2	2019-Jan.
KECO	KECO	NOx, SO_2	1	2012-Jul.
Korea District Heating Corp	Paju Branch #1,2	NOx, O_2, Flow, Temp, D/L, FEP	2	2017-Mar.
	Gwang-Gyo Branch #1	NOx, O_2, Flow, Temp, D/L, FEP	1	2017-Mar.
	Pan-Gyo Branch #1	NOx, O_2, Flow, Temp, D/L, FEP	1	2017-Mar.
	Hwa-Sung Branch #1,2	NOx, O_2, Flow, Temp, D/L, FEP	2	2017-Mar.
	Yong-In Branch #1	NOx, SO_2, O_2, Flow, Temp, Dust, D/L	1	2017-Apr.
	Sam-Song Branch #1,2	NOx, O_2, Flow, Temp, D/L, FEP	2	2017-Apr.
	Su-Won Branch #1,2	NOx, SO_2, O_2, Flow, Temp, Dust, D/L, FEP	2	2017-Apr.
	Dae-Gu Branch #1,2	NOx, SO_2, O_2, Flow, Temp, Dust, D/L, FEP	2	2017-Apr.
City Environment	City Environment #2	NOx, SO_2, O_2, CO, HCl, Dust, Flow, Temp, D/L	1	2015-Mar.
GS Donghae Elec. Power [BHI]	Buk-Pyeong #1,2	NOx, SO_2	4	2013-May.
Seoul Energy	Mok-dong Combined #1	O_2	1	2015-Aug.
	Ma-gok Group Energy #1	NOx, O_2, Flow, D/L	1	2017-Apr.
Sejong CEMS	Asan Incineration	O_2	1	2016-Apr.
Samyang	Incheon 1 Plant	NOx, SO_2, Dust	1	2016-May.
		O_2	1	2017-Nov.
Mona Lisa	Mona Lisa	NOx, SO_2, O_2, CO, Dust, Flow, Temp, D/L,	1	2016-May.
Yangju City	Yangju Incineration	NOx, SO_2, O_2, CO, Dust, Flow, Temp, D/L, FEP	2	2016-Jun.
Dongyang Environmen	Dongyang Environment Muan Plant	NOx, SO_2, O_2, CO, Dust, Flow Temp, D/L, FEP	1	2016-Jun.
Hyundai Steel (Dang-Jin) [Woori CEMS]	Hyundai Steel(Dang-Jin)	O_2	3	2016-Aug.
Su Engineering	Seoul Metropolitan Govt. Jungrang Recovery #1,2	NOx, SO_2, O_2, CO, Flow, Temp, D/L	1	2016-Oct.
	World Trade Center Seoul #1~3	NOx, O_2, Flow, Temp, D/L, FEP	3	2017-Apr.
Sein ENT	Green Environment	NOx, SO_2, O_2, CO, HCl, Dust, Flow,Temp	1	2016-Nov.
SsangYong C&B	SsangYong C&B	NOx, SO_2, O_2, CO, HCl, Dust, Flow, Temp, D/L	2	2017-Jan.
Gigu Environment	Mirae Paper #1,2	NOx, SO_2, O_2, CO, HCl, Dust, Flow, Temp, D/L	2	2017-Feb.
	Hu-Chems #1	NOx	1	2017-Apr.
	Huvis #1	NOx, SO_2, O_2, Dust, Flow, Temp, D/L	1	2017-May.
Pyeong-taek Energy	Pyeong-taek Energy #1~3 CEMS	NOx, O_2, Flow, Temp, D/L, FEP	3	2017-Mar.
Korea Cast Iron Pipe Ind	Korea Cast Iron Pipe Ind	NOx, SO_2, O_2, Dust, Temp	3	2017-May.
Dongwoo Fine-Chem [BestecE&C]	Dongwoo Fine-Chem #1 CEMS	NOx, O_2, Dust, Flow, Temp, D/L, FEP	1	2017-May.
Kyung Hee Medical Center	Kyung Hee Medical Center #1 CEMS	NOx, O_2, Flow, Temp, D/L	1	2017-May.
Kye-Rong City [Incon]	Kye-Ryong Incineration #1 CEMS	NOx, SO_2, O_2, CO, HCl, Dust, Flow, Temp, D/L	1	2017-Jun.
AvanStrate Korea	AvanStrate Korea #1~3 CEMS	NOx, SOx, O_2, Dust, Flow, Temp, D/L	3	2017-Aug.
HaeNam City [Green Medical]	HaeNam Incineration	NOx, SO_2, O_2, CO, HCl, Dust, Flow, Temp, D/L	1	2017-Sep.
POSCO	POSCO Jung-Eup Lab #1	NOx, SO_2, O_2, CO, HCl, Dust, Flow, Temp, D/L	1	2017-Nov.
Kangwon Univ.	Kangwon Univ.	NOx	1	2018-Apr.
Busan Environmental Corp. [Green System]	Busan Environmental Corp. Busan Sewage Treatment Plant	CO_2	1	2018-Jun.
Geumsan City [Korea Environment Corp. (KECO)]	Geumsan Incineration #1	NOx, SO_2, CO, O_2, HCl, Dust, Flow, Temp, D/L	1	2018-Jul.

FGD

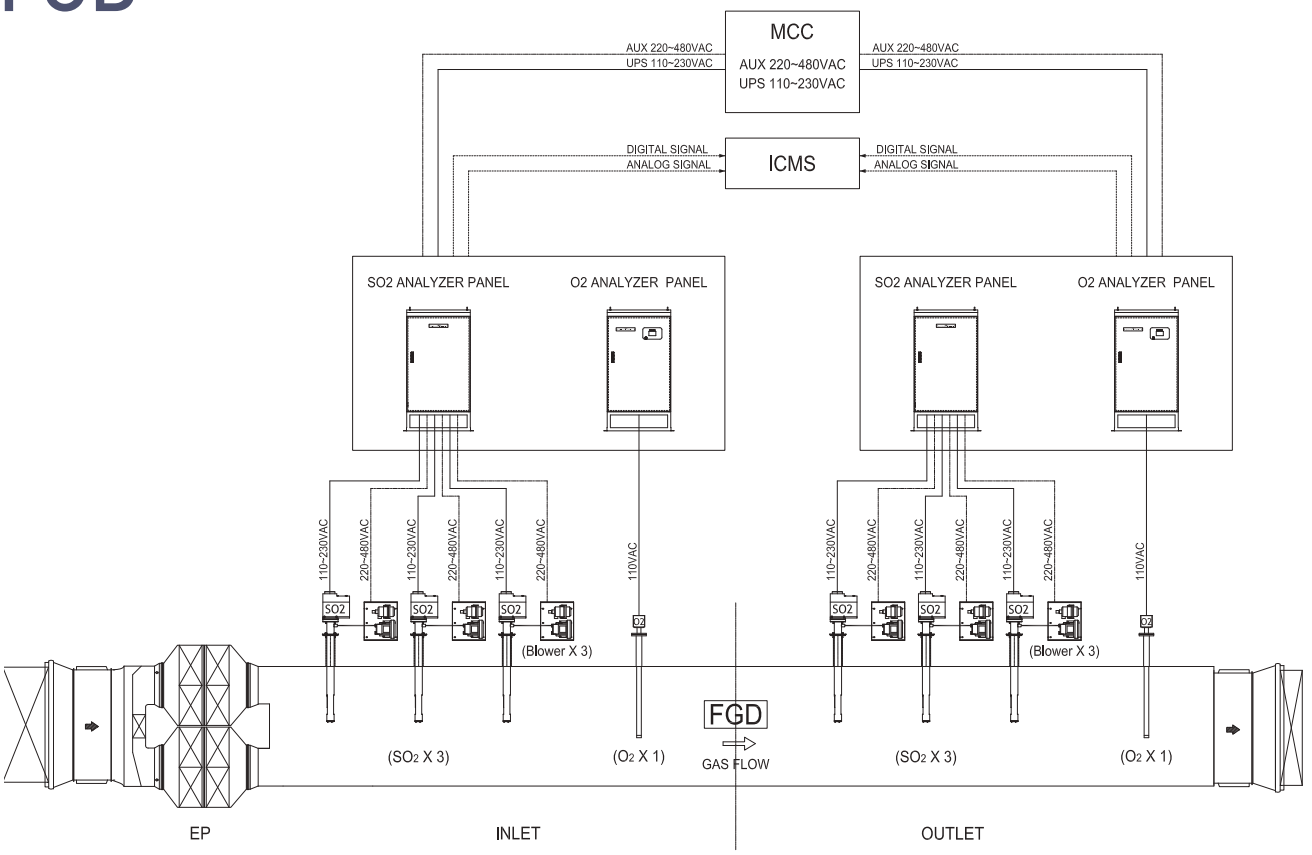
MCC
AUX 220~480VAC
UPS 110~230VAC
AUX 220~480VAC
UPS 110~230VAC
AUX 220~480VAC
UPS 110~230VAC
DIGITAL SIGNAL
ANALOG SIGNAL
ICMS
DIGITAL SIGNAL
ANALOG SIGNAL
SO2 ANALYZER PANEL
O2 ANALYZER PANEL
SO2 ANALYZER PANEL
O2 ANALYZER PANEL
110~230VAC
220~480VAC
110VAC
SO2
O2
(Blower X 3)
(Blower X 3)
FGD
GAS FLOW
(SO2 X 3)
(O2 X 1)
(SO2 X 3)
(O2 X 1)
EP
INLET
OUTLET

SCR

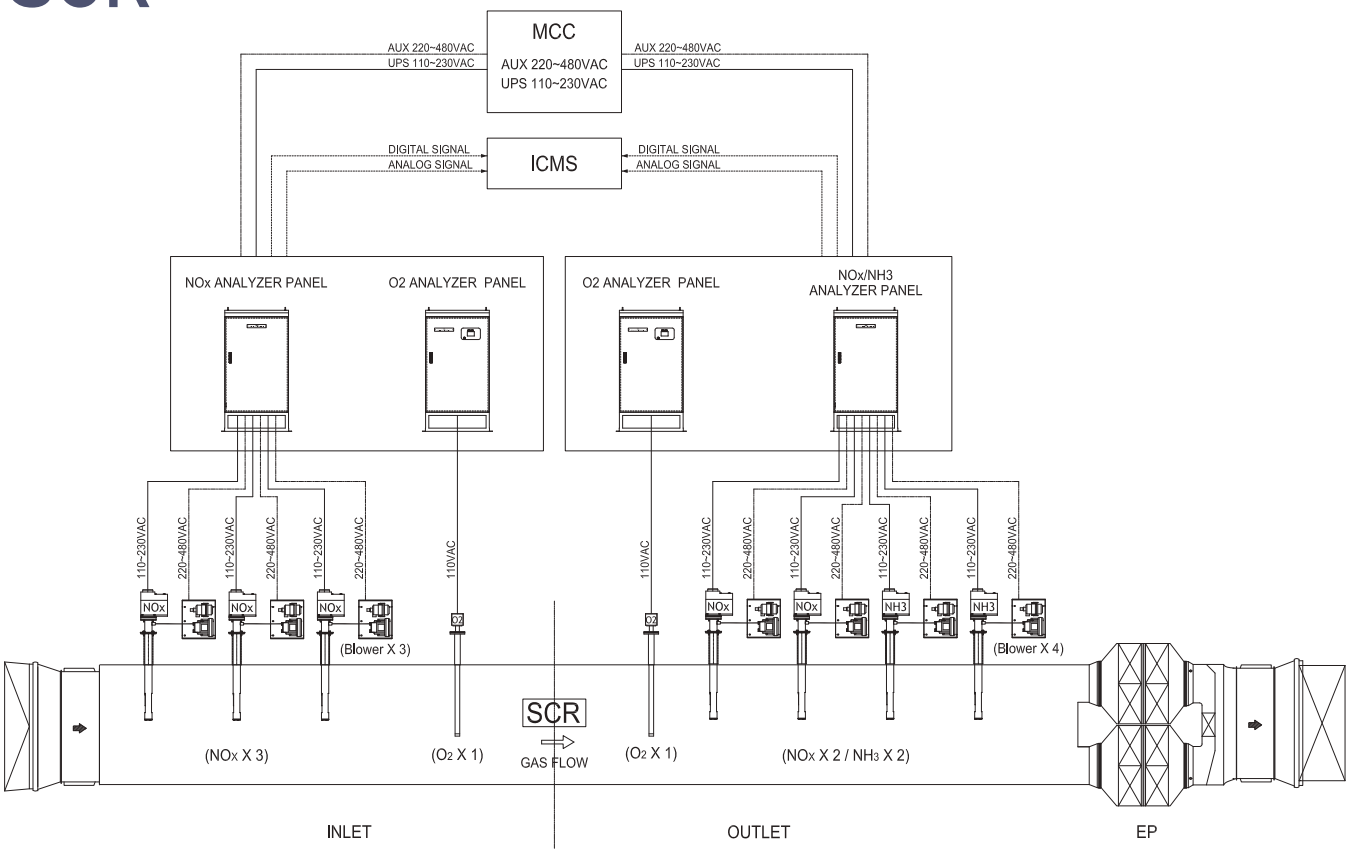
MCC
AUX 220~480VAC
UPS 110~230VAC
AUX 220~480VAC
UPS 110~230VAC
AUX 220~480VAC
UPS 110~230VAC
DIGITAL SIGNAL
ANALOG SIGNAL
ICMS
DIGITAL SIGNAL
ANALOG SIGNAL
NOx ANALYZER PANEL
O2 ANALYZER PANEL
O2 ANALYZER PANEL
NOx/NH3
ANALYZER PANEL
110~230VAC
220~480VAC
110VAC
NOx
NH3
O2
(Blower X 3)
(Blower X 4)
SCR
GAS FLOW
(NOx X 3)
(O2 X 1)
(O2 X 1)
(NOx X 2 / NH3 X 2)
INLET
OUTLET
EP

CEMS EXTRACTIVE

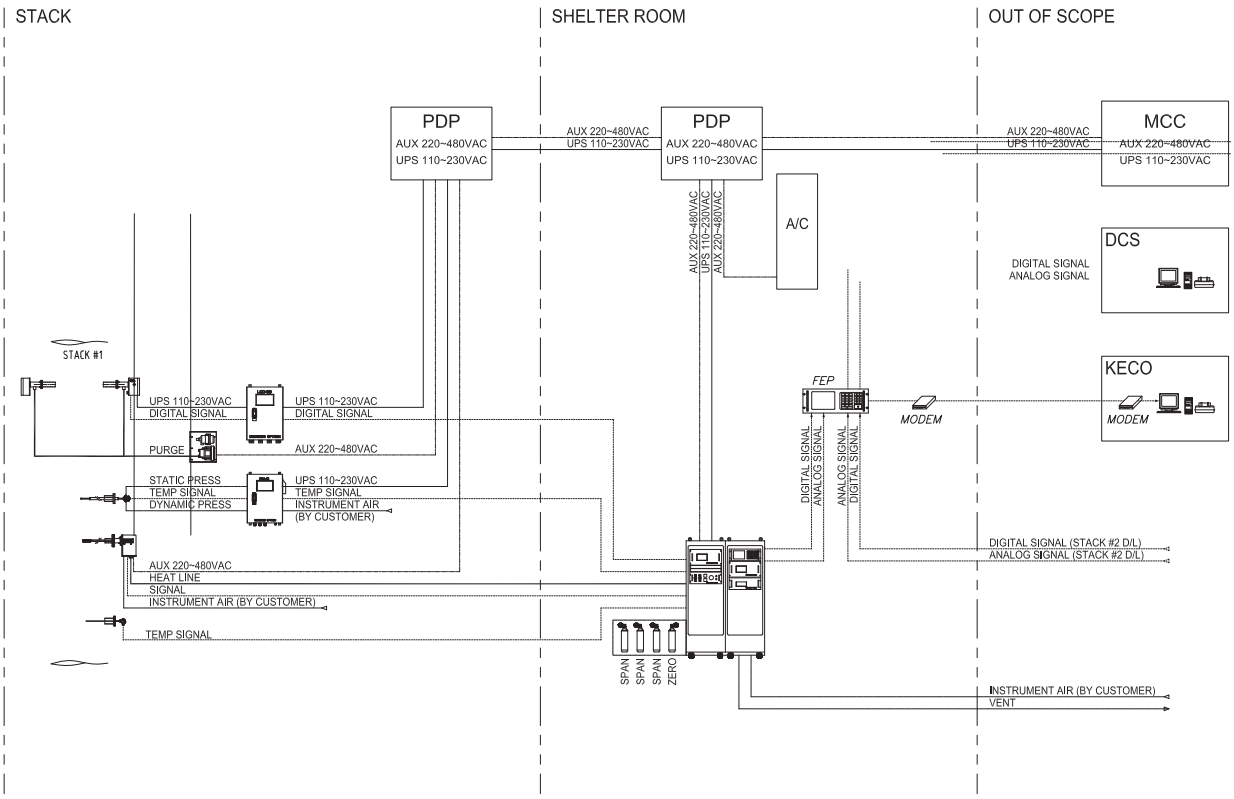

CEMS IN-SITU

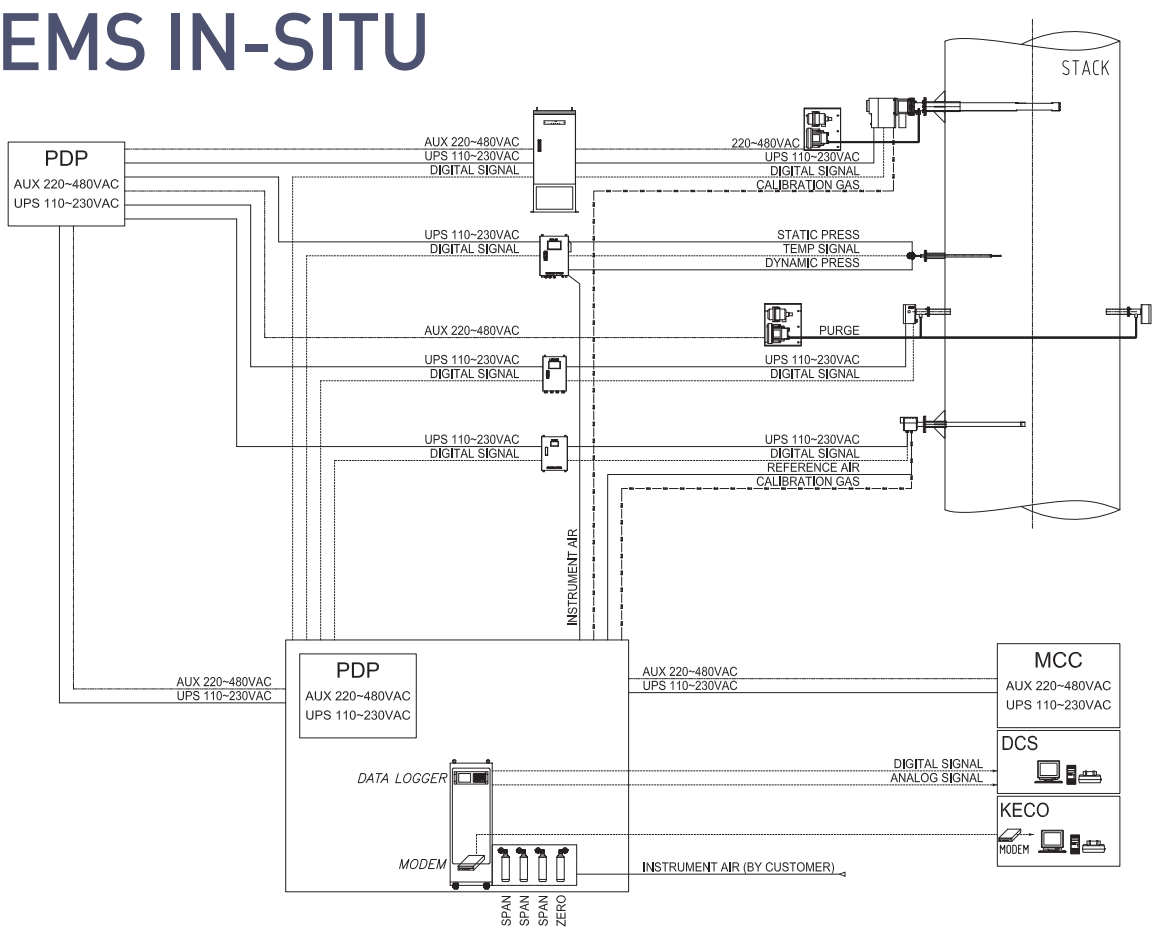

DONGWOO OPTRON Co., Ltd.

DONGWOO OPTRON Co., Ltd.
102-8, Hoean-Daero, Opo-Eup, Gwangju-Si, 12798, Gyeonggi-Do, South Korea
Tel : +82-31-765-0300 / Fax : +82-31-765-0222
Web : www.optron.co.kr / Email : os@optron.co.kr